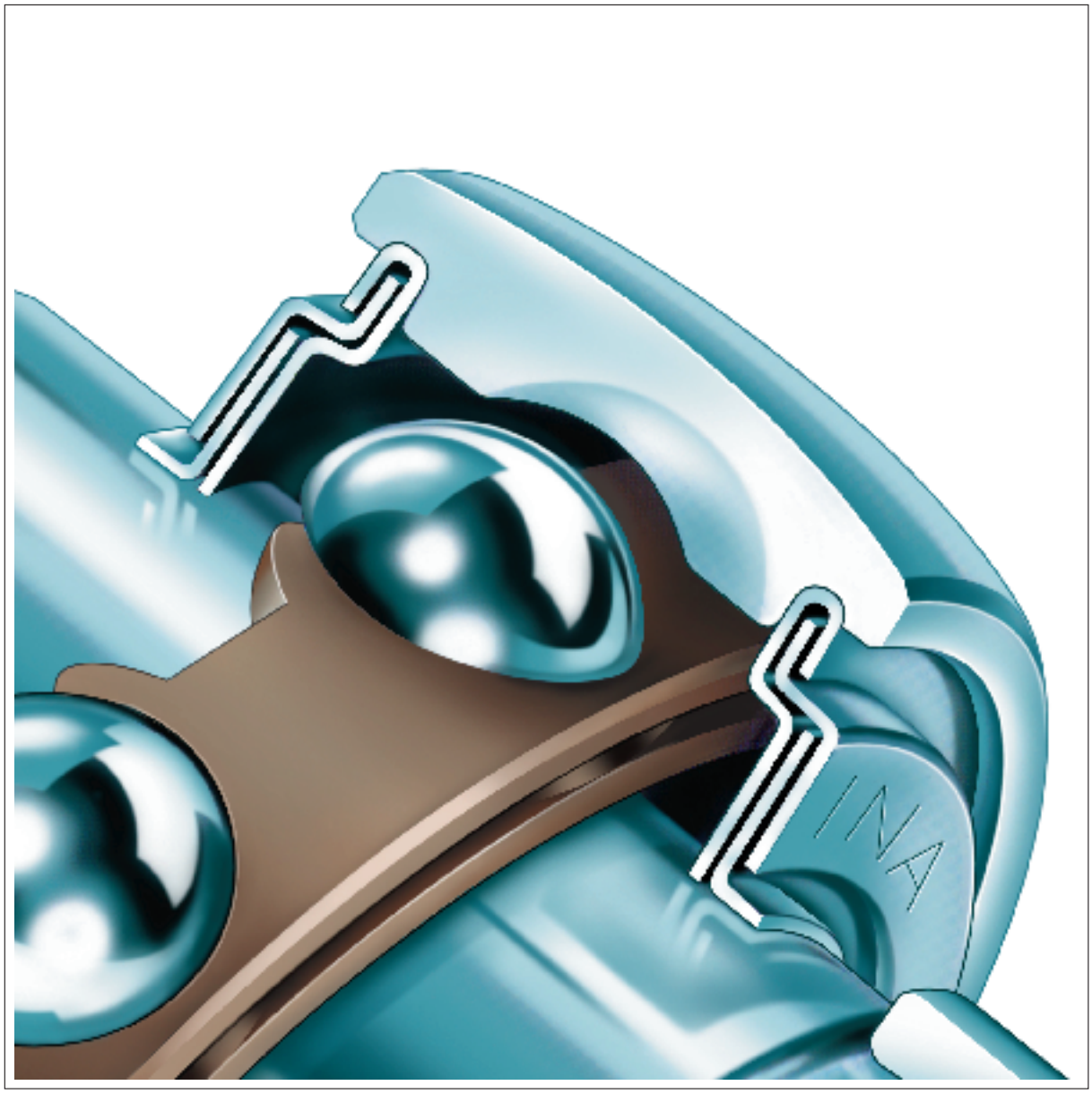

Labyrinth seals for INA ball bearings

Dipl.-Ing. Günter Gerhart and Dipl.-Ing. Michael Kurz

INA reprint
October 1995

Labyrinth seals for INA ball bearings

Dipl.-Ing. Günter Gerhart and Dipl.-Ing. Michael Kurz

1 Introduction

About 4000 years ago, the Ancient Egyptians were already using materials to help in the transportation of loads by reducing losses due to friction. These included simple lubricants such as water in order to reduce the sliding friction of the runners. Later, they used mixtures of olive oil and lime to grease the wooden axles of the carriages.

In relation to energy costs, drive design and environmental considerations, etc., friction is becoming increasingly important. In rolling bearing engineering, a large part of the friction is produced by contact seals. However, the bearings must be sealed to prevent the egress of grease and the penetration of contaminants and moisture. Various seals are used depending on the application. In general, improved sealing leads to an increase in frictional torque. In the field of agricultural and construction machines, the level of contamination is such that very good sealing against dust is necessary and higher frictional torques are of secondary importance. In many applications, a non-contact labyrinth seal fulfils the requirements, which leads to a much lower frictional torque than bearings with contact seals.

2 Friction in ball bearings

The friction in ball bearings is responsible for the development of heat and thus for the operating temperature and the temperature of the lubricant. The total frictional torque of sealed bearings consists of the following parts:

$M = M_0 + M_1 + M_3$	Frictional torque of bearing
M_0	Lubricant friction
M_1	Rolling friction
M_3	Seal friction

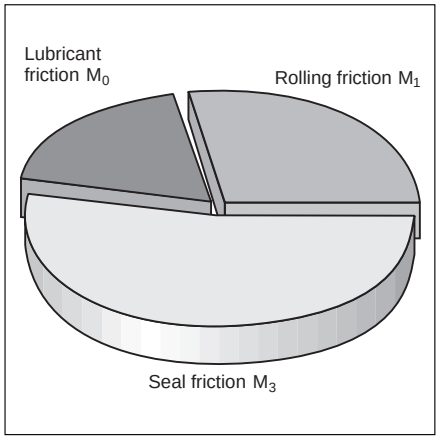

Figure 1 Composition of the total frictional torque

Due to the numerous influences, the individual components of the friction can only be determined approximately and for constant operating conditions.
The important factors are the type of bearing, operating speed, load and heat dissipation.

The **lubricant friction M_0** of a ball bearing, which is independent of load, is determined by the viscosity and the amount of grease as well as by the design of the bearing and the rotational speed.

	Grease type	Kinematic viscosity at 40 °C	DIN standard
①	Barium complex-soap grease (mineral oil base)	220 $mm^2 \cdot s^{-1}$	DIN 51 825-KP2N-20
②	Polyurea (ester oil base)	160 $mm^2 \cdot s^{-1}$	DIN 51 825-KPE2R-30
③	Lithium soap grease (mineral oil base)	68 $mm^2 \cdot s^{-1}$	DIN 51 825-K3N-30
④	Lithium soap grease (diester oil base)	15 $mm^2 \cdot s^{-1}$	DIN 51 825-KE2K-50

Table 1 Various types of grease lubrication

In particular, if there is an excess of grease and at high rotational speeds, the churning effect increases the fluid friction. Due to the operating temperature, the kinematic viscosity of the grease changes, which can lead to a reduction in the lubricant friction with increasing temperature.

$$M_0 = f_0 \cdot (\nu \cdot n)^{2/3} \cdot d_M^3 \cdot 10^{-7} \quad [1]$$

if $\nu \cdot n \geq 2000$

$$M_0 = f_0 \cdot 160 \cdot d_M^3 \cdot 10^{-7}$$

if $\nu \cdot n < 2000$

M_0 [Nmm] Frictional torque resulting from the fluid friction

f_0 [–] Bearing factor for frictional torque dependent on the rotational speed

ν [mm^2/s] Kinematic viscosity of the lubricant at operating temperature

d_M [mm] Average diameter of the bearing ½ · (d+D)

n [min^{-1}] Rotation speed

Special greases can be used to reduce the total friction. However, an optimization of the lubricant in relation to lubricant friction is not always possible because other criteria such as temperature stability, loading capacity etc. have to be considered.

Diagram 1 shows the lubricant friction of different types of grease with the same type of bearing. In order to eliminate seal friction and rolling friction, the tests without any load were carried out with non-contact seals. The percentage distribution of the frictional torque was recorded up to the limiting speed of the bearing.

The size and type of load are factors influencing the **rolling** and **sliding friction M_1**. In ball bearings, the rolling behaviour leads to stretching of the raceway and upsetting of the rolling element. Due to the load, a contact ellipse is formed at the points of contact of the ball raceways.

Due to the different distances between this contact point and the axis of the bearing, pure rolling movement is no longer possible; additional sliding motion occurs. Additional sliding motion might occur for example at the contact points between the rolling element and the cage. However the sliding friction is low under good lubrication conditions.

The frictional torque dependent on load is determined as follows:

$$M_1 = f_1 \cdot P_1 \cdot d_M \quad [1], [2]$$

M_1 [Nmm] Frictional torque caused by the rolling friction

f_1 [–] Bearing factor for frictional torque dependent on load

P_1 [N] Relevant load

d_M [mm] Average diameter of the bearing ½ · (d+D)

In bearings with contact seals, the frictional torque and heating of the bearing unit is determined decisively by the type and the preload of the seal. The **seal friction M_3** can only be estimated for some seal types. Since an exact calculation is not possible due to the numerous influences, this must be determined by tests.

Depending on the application and the design specification, a variety of requirements are placed on the seal. INA therefore offers the designer a range of seal types.

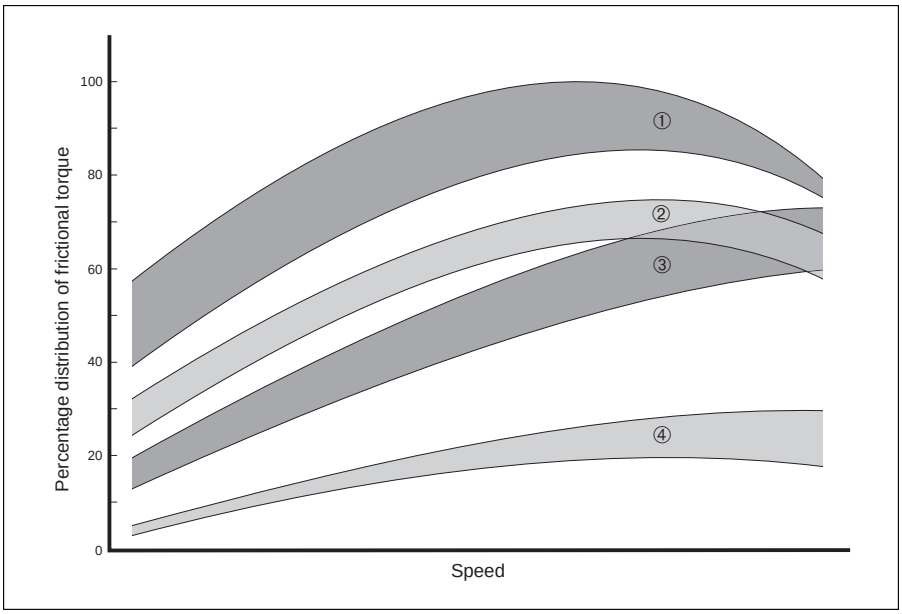

Diagram 1 Distribution of frictional torques with different greases, see also table 1

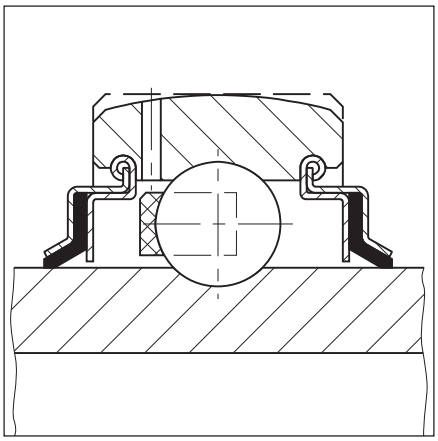

Figure 2 INA R type seal

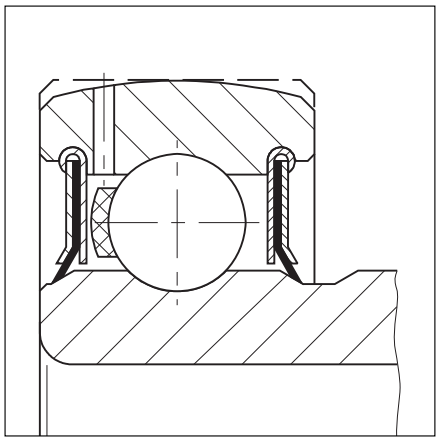

Figure 3 INA P type seal

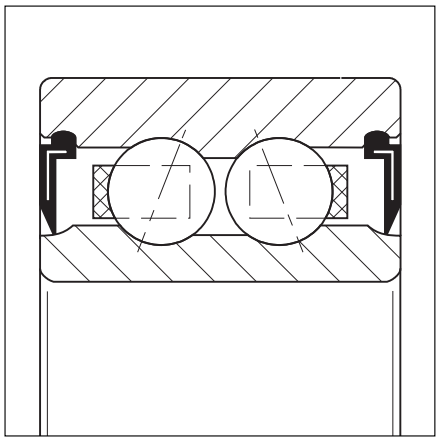

Figure 4 INA RS type seal

3 INA seals for ball bearings

The main distinction is drawn between contact and non-contact seals. The appropriate seal type is dependent on the application and the associated environmental influences.

Contact seals have good sealing ability. However, the preload of the seal has a significant influence on the total frictional torque of the bearing.

The 3 piece **INA R type seal** has a zinc plated inner and outer cover (Figure 2). Between the covers there is an NBR seal lip running on a ground shoulder.

The contact pressure of the seal lip is determined by the radial preload.

The construction of the **INA P type seal** is similar to that of the R type seal (Figure 3). Between the zinc plated inner and outer cover there is a radially and axially preloaded seal lip in a seal groove.

The **INA RS type seal** is based on the same principle, but a single piece vulcanised seal is used (Figure 4).

The advantage of the R type seal compared to the P and RS type seals is the size of the grease reservoir; it has a larger grease capacity.

The sealing effect of non-contact seals is achieved by one or more narrow gaps. Due to this non-contact seal type and the resulting low-friction running, the heat development of the bearing is much lower. This gives a higher permissible rotating speed and longer relubrication intervals; alternatively, relubrication is no longer necessary.

However, the **Z sealing shield** has only a limited sealing effect and is used in conditions of low contamination levels or in combination with additional sealing (Figure 5).

The 3 piece **labyrinth seal** has a significantly better sealing effect (Figure 6). It comprises an inner and outer sheet steel washer rigidly rolled into the outer ring. An angled sheet steel ring is located in a non-contact arrangement between the washers and is pressed on the inner ring. All parts of the L type seal are zinc plated on all sides in order to improve corrosion protection.

Since the seal is extended in an axial direction, this gives an enlarged grease reservoir, allowing longer lubrication intervals (Figure 7).

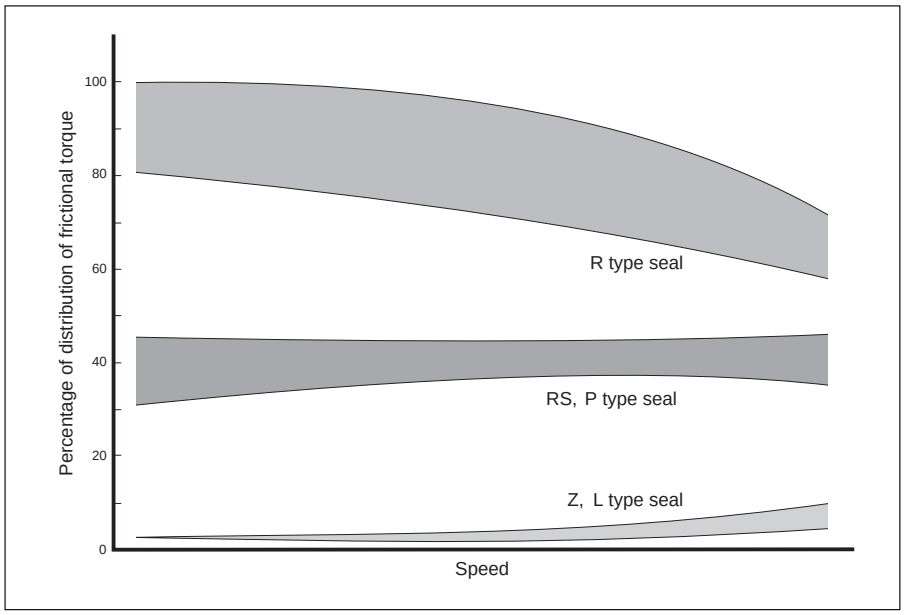

Diagram 2 Load free frictional torque as a function of the rotational speed

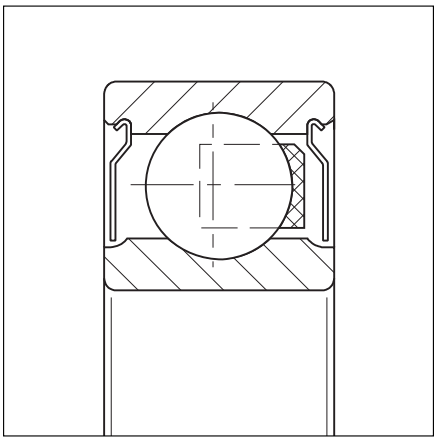

Figure 5 INA Z type seal

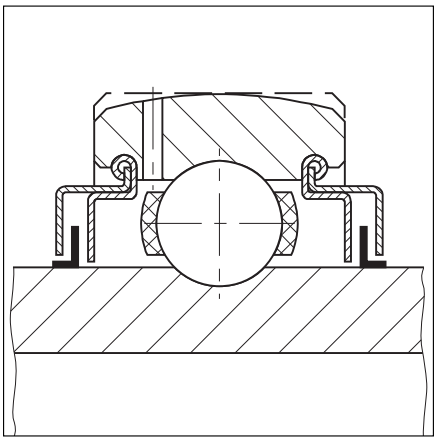

Figure 6 INA labyrinth seal

Figure 7 Textile bearing with INA labyrinth seal

4 Comparison of the frictional torque of individual seal types

In bearings operating under low to medium loads, the frictional losses due to the seal account for the largest share of the total friction. Based on series of empirical tests, the differences in frictional torque of the different types of seals were determined. The frictional torque behaviour over the whole speed spectrum is shown for bearings of equal size and with the same greasing at operating temperature. The proportion of rolling friction could be disregarded, since the bearings were tested without load. In order to allow conclusions to be drawn independent of bearing size, no absolute values are given. Diagram 2 shows a percentage distribution of the frictional torques (lubricant friction and seal friction) as a function of the speed.

The frictional torque curves of P and RS type seals and those of Z and L type seals are combined as one range due to their identical action and results. Since the Z and L type seals do not have any seal friction, the measured frictional torque without load can be interpreted as pure lubricant friction. The difference between this and the friction values of P, RS and R type seals is the friction level due to the contact seals.

The reduction for the R type seal in the higher speed range can be explained by a number of factors, including the decrease in the kinematic viscosity of the grease due to strong heating of the bearing, the preload of the seal material and thus the total friction. The disadvantage of this effect, however, is that the life of standard greases is considerably reduced at operating temperatures higher than 70 °C.

Diagram 3 shows the influence of the seal type on the equilibrium temperature of the bearing.

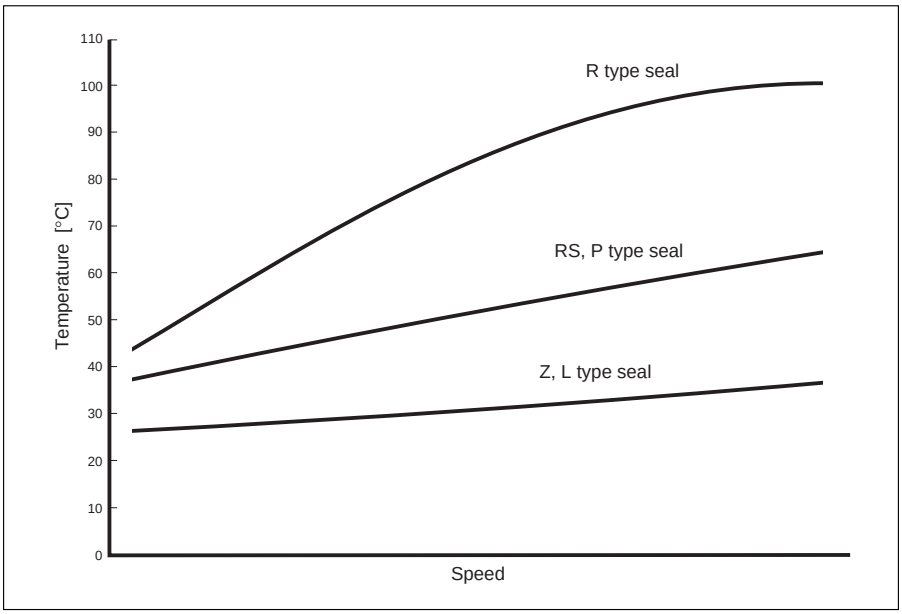

Diagram 3 Equilibrium temperature as function of the rotational speed

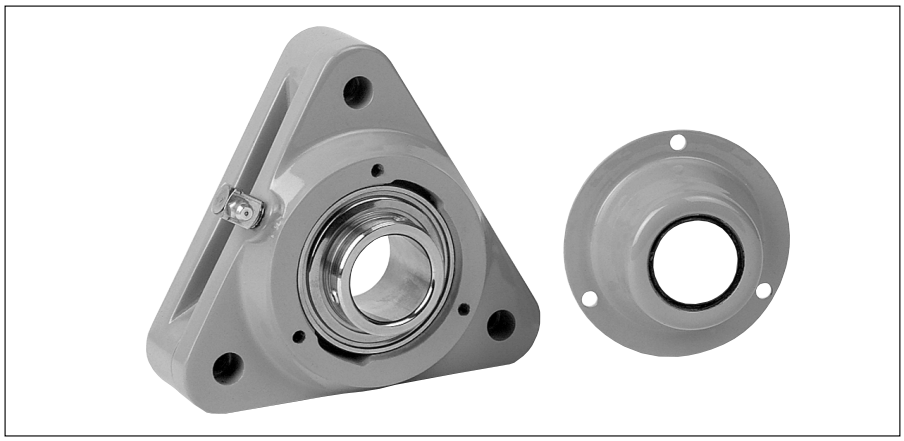

Figure 8 Special housing unit for the textile industry with integral INA labyrinth seal

Figure 9 Textile bearing with low friction torque and special greasing

5 Consequences for the application

Depending on the application, a reduction in drive energy can play an important role. This can be taken into consideration especially in those areas where machines with a high number of bearing locations are used, in the design dimensioning of the driving unit. A brief calculation example is given to explain the conclusions of Diagram 2.

Example: INA radial insert ball bearing GE 30 KLLH(B) (Figure 11) with d = 30 mm under radial load:

Bearing:
C_0 = 11 300 N
C = 19 500 N
d_M = 46 mm

Load:
n = 500 min^{-1}
P = 1 950 N
C/P = 10
$f_1 = 0{,}0006 \cdot (P/C_0)^{1/2} = 2{,}49 \cdot 10^{-4}$

Frictional torque:

Lubricant friction:
M_0 = from test

Rolling friction:
$M_1 = f_1 \cdot P \cdot d_M = 2{,}49 \cdot 10^{-4} \cdot 1950 \cdot 46$
= 22,4 Nmm

Seal friction:
M_3 = from test

Bearing with contact RS type seal
M_0+M_3 = 53,4 Nmm
M_{ges} = 75,8 Nmm

Bearing with non-contact labyrinth seal
M_0+M_3 = 2,5 Nmm
M_{ges} = 24,9 Nmm

Saving = 50,9 Nmm/bearing
= 67,2 %

Figure 11 Paper guide roller bearing arrangement

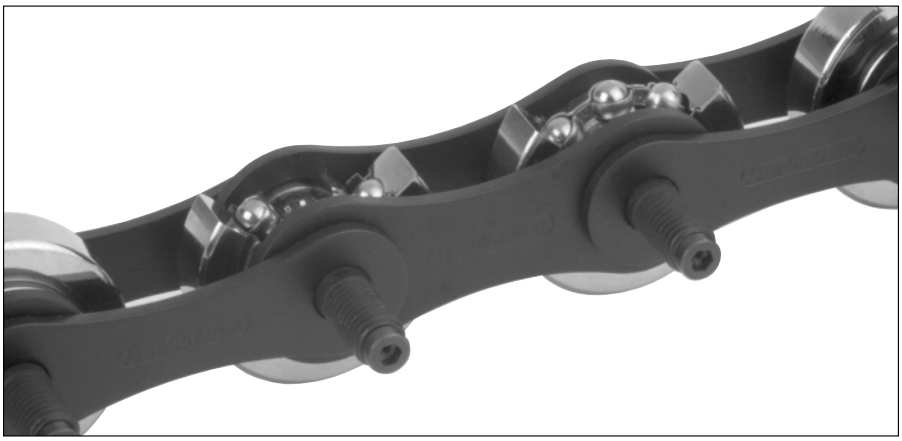

Figure 10 Special bearing in transport chains for dryers

6 Applications for bearings with labyrinth seals

There is a wide range of possible applications for bearings with very low friction especially in the field of textile and paper processing machines; they are particularly suitable for application in guide rollers, pleating rollers and heel rollers.

The INA labyrinth seal has particular advantages over other bearing types especially in the textile industry. In ball bearings with contact seals or 2 Z sealing shields, a thin film of lubricant is formed between the seal lip and the seal groove. Fabric fly then adheres to this lubricant film. Due to “capillary action”, this fly then draws the base oil out of the lubricant. However, the design of the labyrinth seal prevents contact between the fly and the lubricant. This seal type also offers the same advantage in relation to paper dust. The optimum combination would be light running grease (see Diagram 1) with labyrinth seals (Figures 8, 9 and 10).

In machines with a large number of bearings, the drive power required can be reduced by minimizing friction, giving savings on manufacturing and energy costs.

Literature:

[1] Eschmann, P., Hasbargen, L. und Weigand K.: Die Wälzlagerpraxis, R. Oldenbourg Verlag München-Wien, 1978

[2] Catalogue GB 511, INA Schaeffler Wälzlager Homburg/Saar

Authors:

Dipl.-Ing. Günter Gerhart, engineering and sales manager

Dipl.-Ing. Michael Kurz, application engineering manager

Schaeffler Wälzlager oHG Homburg/Saar

Schaeffler Wälzlager oHG

Postfach 15 53
D-66406 Homburg (Saar)
Telephone (0 68 41) 7 01-0

Art.Nr. 910 467-4/LDW GB-D 05961 ○ · Printed in Germany